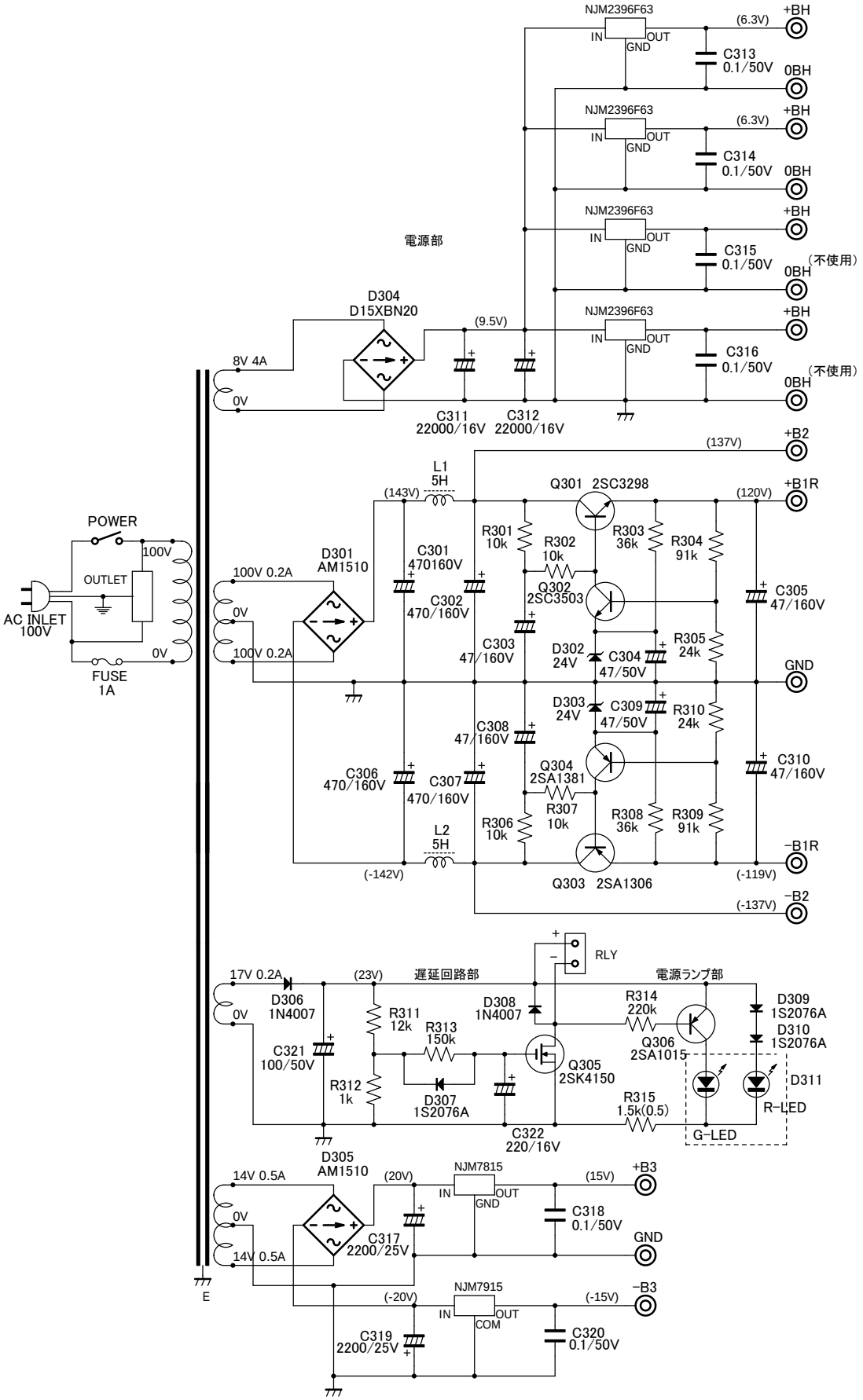
NJM2396F63
IN
OUT
GND
(6.3V)
+BH
C313
0.1/50V
0BH
C314
0.1/50V
C315
0.1/50V
(不使用)
C316
0.1/50V
電源部
D304
D15XBN20
(9.5V)
8V 4A
0V
C311
22000/16V
C312
22000/16V
+B2
(137V)
L1
5H
(143V)
Q301 2SC3298
+B1R
(120V)
POWER
100V
OUTLET
AC INLET
100V
FUSE
1A
D301
AM1510
100V 0.2A
C301
470160V
C302
470/160V
R301
10k
R302
10k
R303
36k
R304
91k
Q302
2SC3503
C305
47/160V
C303
47/160V
D302
24V
C304
47/50V
R305
24k
GND
D303
24V
C309
47/50V
R310
24k
C308
47/160V
C306
470/160V
C307
470/160V
Q304
2SA1381
C310
47/160V
R307
10k
R306
10k
R308
36k
R309
91k
L2
5H
(-142V)
Q303 2SA1306
-B1R
(-119V)
-B2
(-137V)
RLY
17V 0.2A
D306
1N4007
(23V)
遅延回路部
電源ランプ部
D308
1N4007
R314
220k
D309
1S2076A
D310
1S2076A
R311
12k
R313
150k
Q306
2SA1015
C321
100/50V
Q305
2SK4150
D311
R312
1k
D307
1S2076A
R315
1.5k(0.5)
R-LED
G-LED
C322
220/16V
D305
AM1510
14V 0.5A
(20V)
NJM7815
(15V)
+B3
C318
0.1/50V
C317
2200/25V
E
NJM7915
(-20V)
(-15V)
-B3
COM
C319
2200/25V
C320
0.1/50V

電源部回路